KINCROME®
PROFESSIONAL QUALITY TOOLS

SMD LED 240V WORKLIGHTS

SMD LED TECHNOLOGY

ALUMINIUM & STEEL CONSTRUCTION

SOFT GRIP HANDLE

5000K BRIGHT WHITE COLOUR

KP2301, KP2302, KP2303, KP2304, KP2305
ED1/June 16

SMD LED WORKLIGHTS

Table of Contents

Know Your Product 2-6
Worklight Safety Instructions 7-9
Worklight Assembly 10-11
Worklight Operation 12
Warranty..... 13

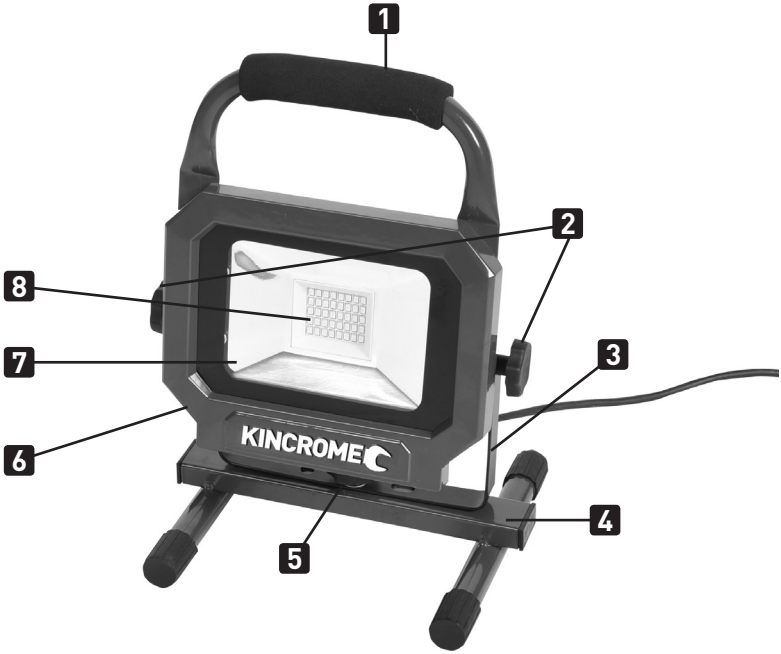

Know Your Product

1. Soft Grip Handle
2. Tilt Lock Knobs
3. Light Support Frame
4. H Frame Stand
5. Light Lock Knob
6. Aluminium Light Body
7. Tempered Glass Safety Shield
8. SMD LED

Part No:..... **KP2301**
Description..... **20W Floor Worklight**
LED Power: **20W**
LED Construction: ..... **SMD (Surface Mounted Device)**
Input: ..... **220 - 240V ~ 50/60Hz**
Lumen Output:..... **2000 Lumen**
Colour Output: ..... **5000K Bright White**
Light Angle:..... **120º**
Ingress Protection: **IP65**
Construction: ..... **Aluminium Worklight**
..... **Steel Frame**
Worklight Height: 315mm
Power Cord Length:..... **1.5m**
Net Weight:..... **1.3kg**

SMD LED WORKLIGHTS

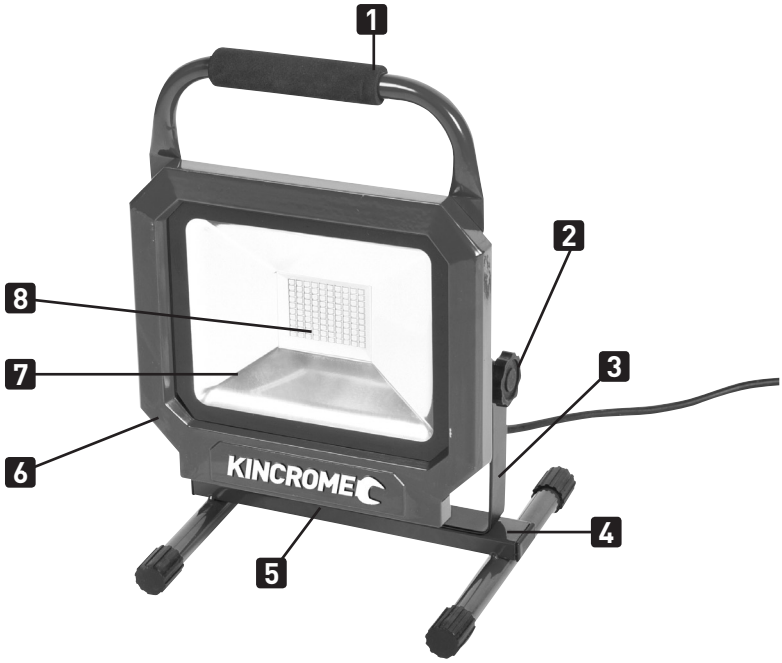

Know Your Product

1. Soft Grip Handle
2. Tilt Lock Knobs
3. Light Support Frame
4. H Frame Stand
5. Light Lock Knob
6. Aluminium Light Body
7. Tempered Glass Safety Shield
8. SMD LED

Part No: **KP2302**
Description ..... **50W Floor Worklight**
LED Power: **50W**
LED Construction: ..... **SMD (Surface Mounted Device)**
Input: ..... **220 - 240V ~ 50/60Hz**
Lumen Output: ..... **4700 Lumen**
Colour Output: ..... **5000K Bright White**

Light Angle: **120º**
Ingress Protection: **IP65**
Construction: ..... **Aluminium Worklight**
..... **Steel Frame**
Worklight Height: **385mm**
Power Cord Length: **1.5m**
Net Weight: **2.3kg**

SMD LED WORKLIGHTS

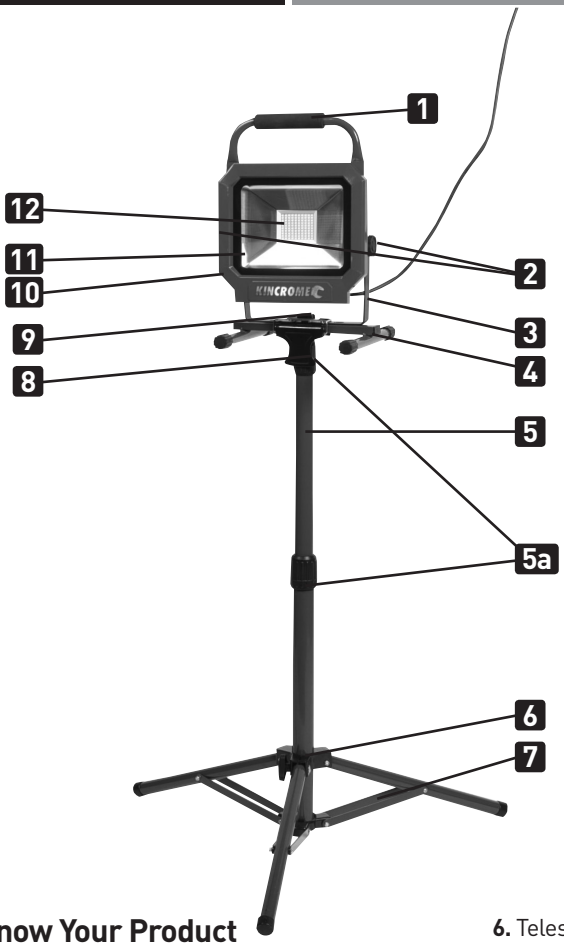

Height Adjustable Tripod

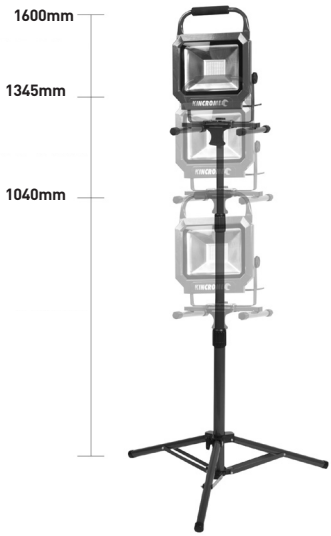

Know Your Product

1. Soft Grip Handle
2. Tilt Lock Knobs
3. Light Support Frame
4. H Frame Stand
5. Telescopic Stand
5a. Telescopic Lock Nuts
6. Telescopic Stand Leg Lock Knob
7. Telescopic Stand Legs
8. Quick Release Clamp
9. Light Lock Knob
10. Aluminium Light Body
11. Tempered Glass Safety Shield
12. SMD LED

Part No: **KP2303**
Description ..... **30W 2-in-1 Worklight**
LED Power: **30W**
LED Construction: ..... **SMD (Surface Mounted Device)**
Input: ..... **220 - 240V ~ 50/60Hz**
Lumen Output: ..... **3000 Lumen**
Colour Output: ..... **5000K Bright White**
Light Angle: **120º**
Ingress Protection: **IP65**

Construction: ..... **Aluminium Worklight**
..... **Steel Frame**
Power Cord Length: **2.5m**
Worklight Height: **385mm**
Tripod Adjustable Heights: ... **1040mm (A)**
..... **1040-1345mm (B)**
..... **1345-1600mm (C)**
Net Weight: ..... **5.5kg (Including Tripod)**

SMD LED WORKLIGHTS

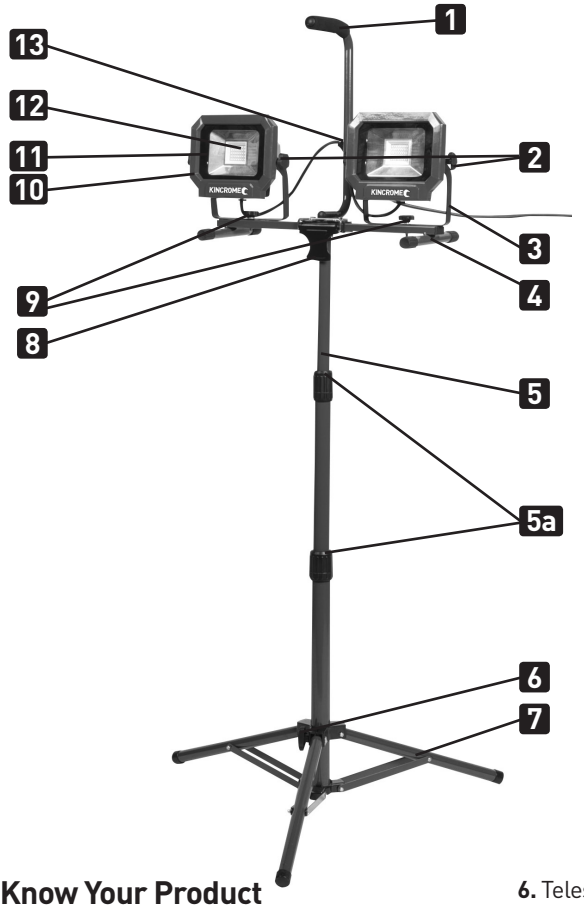

Height Adjustable Tripod

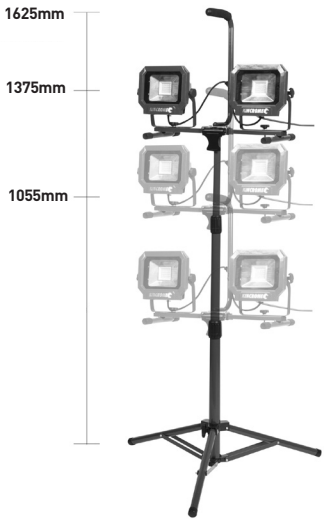

Know Your Product

1. Soft Grip Handle
2. Tilt Lock Knobs
3. Light Support Frame
4. H Frame Stand
5. Telescopic Stand
5a. Telescopic Lock Nuts
6. Telescopic Stand Leg Lock Knob
7. Telescopic Stand Legs
8. Quick Release Clamp
9. Light Lock Knob
10. Aluminium Light Body
11. Tempered Glass Safety Shields
12. SMD LED
13. Power Cord Lock Knob

Part No: **KP2304**
Description ..... **2 x 20W Twin 2-in-1 Worklight**
LED Power: ..... **2 x 20W**
LED Construction: ..... **SMD (Surface Mounted Device)**
Input: ..... **220 - 240V ~ 50/60Hz**
Lumen Output: ..... **2 X 2000 Lumen**
Colour Output: ..... **5000K Bright White**
Light Angle: **120º**
Ingress Protection: **IP65**

Construction: ..... **Aluminium Worklight**
..... **Steel Frame**
Power Cord Length: **2.5m**
Worklight Height: **410mm**
Tripod Adjustable Heights: ... **1055mm (A)**
..... **1055-1375mm (B)**
..... **1375-1625mm (C)**
Net Weight: ..... **5.1kg (Including Tripod)**

SMD LED WORKLIGHTS

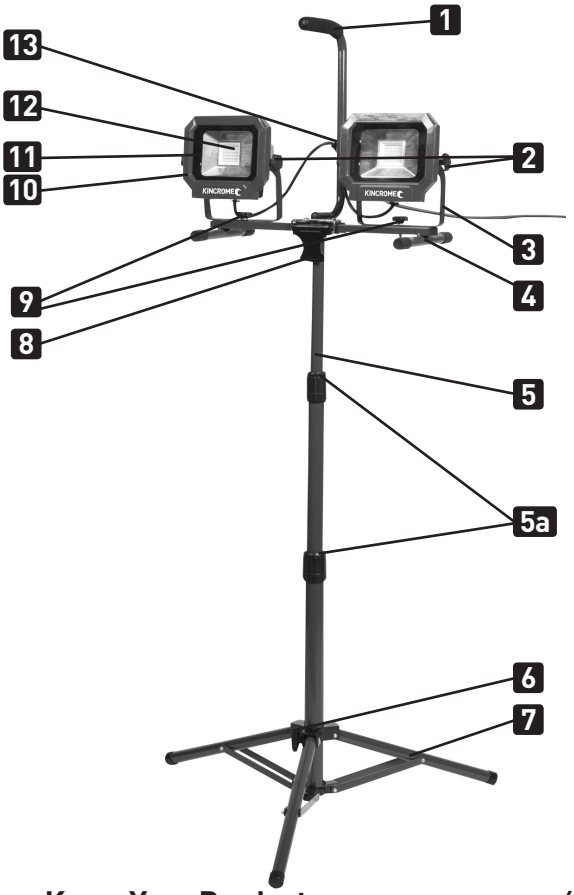

Height Adjustable Tripod

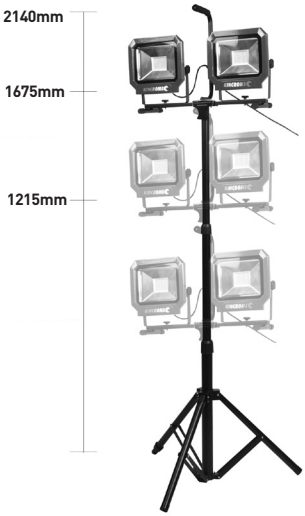

Know Your Product

1. Soft Grip Handle
2. Tilt Lock Knobs
3. Light Support Frame
4. H Frame Stand
5. Telescopic Stand
5a. Telescopic Lock Nuts
6. Telescopic Stand Leg Lock Knob
7. Telescopic Stand Legs
8. Quick Release Clamp
9. Light Lock Knob
10. Aluminium Light Body
11. Tempered Glass Safety Shields
12. SMD LED
13. Power Cord Lock Knob

Part No: **KP2305**
Description ..... **2 x 30W Twin 2-in-1 Worklight**
LED Power: ..... **2 x 30W**
LED Construction: ..... **SMD (Surface Mounted Device)**
Input: ..... **220 - 240V ~ 50/60Hz**
Lumen Output: ..... **2 X 3000 Lumen**
Colour Output: ..... **5000K Bright White**
Light Angle: **120º**
Ingress Protection: **IP65**

Construction: ..... **Aluminium Worklight**
..... **Steel Frame**
Power Cord Length: **2.5m**
Worklight Height: **420mm**
Tripod Adjustable Heights: ... **1215mm (A)**
..... **1215-1675mm (B)**
..... **1675-2140mm (C)**
Net Weight: ..... **9.1kg (Including Tripod)**

GENERAL SMD LED WORKLIGHT SAFETY WARNINGS

Save all warnings and instructions for future reference.
WARNING! Read all safety warnings and all instructions. Failure to follow the warnings and instructions may result in serious injury.

1) Work Area Safety

a. **Keep work area clean and well lit.** Cluttered or dark areas invite accidents.
b. **Do not operate power tools in explosive atmospheres, such as in the presence of flammable liquids, gases or dust.** Power tools create sparks which may ignite the dust or fumes.
c. **Keep children and bystanders away while operating a power tool.** Distractions can cause you to lose control.
d. **This appliance is not intended for use by persons (including children) with reduced physical, sensory or mental capabilities, or lack of experience and knowledge, unless they have been given supervision or instruction concerning use of the appliance by a person responsible for their safety.**
e. **Children should be supervised to ensure that they do not play with the appliance.**

2) Electrical Safety

a. **Power tool plugs must match the outlet. Never modify the plug in any way. Do not use any adapter plugs with earthed (grounded) power tools.** Unmodified plugs and matching outlets will reduce risk of electric shock.
b. **Avoid body contact with earthed or grounded surfaces such as pipes, radiators, ranges and refrigerators.** There is an increased risk of electric shock if your body is earthed or grounded.
c. **Do not expose power tools to rain or wet conditions.** Water entering a power tool will increase the risk of electric shock.
d. **Do not abuse the cord. Never use the cord for carrying, pulling or unplugging the power tool. Keep cord away from heat, oil, sharp edges or moving parts.** Damaged or entangled cords increase the risk of electric shock.
e. **When operating a power tool outdoors, use an extension cord suitable for outdoor use.** Use of a cord suitable for outdoor use reduces the risk of electric shock.
f. **If operating a power tool in a damp location is unavoidable, use a residual current device (RCD) protected supply.** Use of an RCD reduces the risk of electric shock

3) Personal Safety

a. **Stay alert, watch what you are doing and use common sense when operating a power tool. Do not use a power tool while you are tired or under the influence of drugs, alcohol or medication.** A moment of inattention while operating power tools may result in serious personal injury.
b. **Use personal protective equipment. Always wear eye protection.** Protective equipment such as dust mask, non-skid safety shoes, hard hat, or hearing protection used for appropriate conditions will reduce personal injuries.
c. **Prevent unintentional starting. Ensure the switch is in the off position before connecting to power source and/or battery pack, picking up or carrying the tool.** Carrying power tools with your finger on the switch or energising power tools that have the switch on invites accidents.
d. **Remove any adjusting key or wrench before turning the power tool on.** A wrench or a key left attached to a rotating part of the power tool may result in personal injury.
e. **Do not overreach. Keep proper footing and balance at all times.** This enables better control of the power tool in unexpected situations.
f. **Dress properly. Do not wear loose clothing or jewellery. Keep your hair, clothing and gloves away from moving parts.** Loose clothes, jewellery or long hair can be caught in moving parts.
g. **If devices are provided for the connection of dust extraction and collection facilities, ensure these are connected and properly used.** Use of dust collection can reduce dust-related hazards.

4) Power Tool Use and Care

a. **Do not force the power tool. Use the correct power tool for your application.** The correct power tool will do the job better and safer at the rate for which it was designed.
b. **Do not use the power tool if the switch does not turn it on and off.** Any power tool that cannot be controlled with the switch is dangerous and must be repaired.
c. **Disconnect the plug from the power source and/or the battery pack from the power tool before making any adjustments, changing accessories, or storing power tools.** Such preventive safety measures reduce the risk of starting the power tool accidentally.
d. **Store idle power tools out of the reach of children and do not allow persons unfamiliar with the power tool or these instructions to operate the power tool.** Power tools are dangerous in the hands of untrained users.
e. **Maintain power tools. Check for misalignment or binding of moving parts, breakage of parts and any other condition that may affect the power tool's operation.** If damaged, have the power tool repaired before use. Many accidents are caused by poorly maintained power tools.
f. **Keep cutting tools sharp and clean.** Properly maintained cutting tools with sharp cutting edges are less likely to bind and are easier to control.
g. **Use the power tool, accessories and tool bits etc., in accordance with these instructions taking into account the working conditions and the work to be performed.** Use of the power tool for operations different from those intended could result in a hazardous situation.
h. **The electric motor has been designed for 230V and 240V only.** Always check that the power supply corresponds to the voltage on the rating plate.

5) Additional Safety Instructions for Worklights

a. **Luminaire can under no circumstances be mounted on normally flammable surfaces.**
b. **Ensure the floodlight is correctly charged before initial use.**
c. **DO NOT leave the unit in a totally discharged state for an extended period of time as this may result in permanent damage.**
d. **DO NOT cover or block the lens during use.**
e. **DO NOT turn the floodlight on when it is being re-charged.**
f. **DO NOT shine directly into your, other person's or animal's eyes.**
g. **DO NOT allow children to use the floodlight.**
h. **DO NOT handle or move the floodlight whilst it is being charged.**
i. **DO NOT use the floodlight if you suspect that the battery or the spotlight casing is damaged.**
j. **DO NOT immerse the floodlight in water.**
k. **Ensure the floodlight is unplugged and allowed to cool before attempting any cleaning or replacement.**
l. **When not in use store the floodlight in a safe, dry, childproof location.**

6) Service

a. **Have your power tool serviced by a qualified repair person using only identical replacement parts.** This will ensure that the safety of the power tool is maintained.

Electrical Safety

a. **Inadequate extension cords can be dangerous.** If an extension cord is used, it shall be suitable for outdoor use, and the connection has to be kept dry and off the ground. It is recommended that this is accomplished by means of a cord reel which keeps the socket at least 60 mm above the ground. Always use an approved extension lead suitable for the power input of this tool. Before use, inspect the extension lead for signs of damage, wear and ageing. Replace the extension lead if damaged or defective. When using an extension lead on a reel, always unwind the lead completely. Use of an extension lead not suitable for the power input of the tool or which is damaged or defective may result in a risk of fire and electric shock.
b. **Always switch off the mains disconnecting switch when leaving the machine unattended.**
c. **Never touch the mains plug and the socket with wet hands or use the appliance in the rain.**

DESCRIPTION OF SYMBOLS

The following symbols could be shown on the tool:

	Read the instruction manual before use. Failure to follow the warnings and instructions may result in electric shock, fine and/or serious injury.	W	Watts
	Warning	kg	Kilograms
~	Alternating current	V	Volts
A	Amps	Hz	Hertz

Unpacking

Unpack all the components from the box.
When unpacking the LED Worklight, carefully inspect for any damage that may have occurred during transit.
Check for loose, missing or damaged parts.
1. Ensure all packaging materials are disposed of as per your local council guide lines.

Understanding Your Product

2 in 1

2 in 1 refers to the ability to either use the LED worklight directly on the H Frame stand or mount the H Frame Stand directly onto the telescopic stand (5) .

H Frame Stand

Refers to the stand or floor frame that the worklight is mounted onto.

Telescopic Stand

Refers to the adjustable height stand that the LED worklight can be mounted onto.

Lumen Output

Lumen output refers to the measure of the total amount of visible light.

Colour Temperature

Refers to LED output colour.

ASSEMBLY

Note: The below assembly instructions covers models KP2301, KP2302, KP2303, KP2304 & KP2305.

Assembly of Floor Worklights (KP2301 & KP2302)

1. Place the H frame stand (4) on a stable work area with the rubber feet facing down (Fig 1).
2. While holding the LED worklight in one hand, lower and place the light support frame (3) onto the H frame stand (4) ensuring that the centre hole is aligned with the fastening hole (Fig 2).
3. Insert the light lock knob (5) through the light support frame (3) hole and screw into the H frame stand (4) fastening hole and tighten by rotating clockwise (Fig 3).

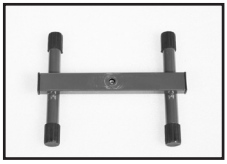

(Fig 1)

(Fig 2)

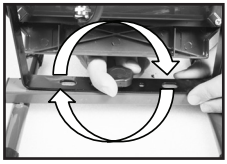

(Fig 3)

Assembly of KP2303 - 2 in 1 Worklight

1. Release the telescopic stand lock knob (6) by rotating anti-clockwise (Fig 4).
2. Lower the telescopic stand legs (7) (Fig 5) until the legs are fully spread apart as shown in Fig 6 and re-tighten telescopic stand lock knob (6) by rotating clockwise (Fig 6).
3. Release the quick release clamp (8) by lifting the lever upwards and fold the wire holders away from the quick release lever (Fig7).
4. Place the assembled LED worklight onto the telescopic quick release clamp (8), fold the 2 small wire clips over the H frame stand (4) (Fig 8), then locate the large wire clip over the top of the 2 small wire clips (Fig 8) and push down on the quick release lever to secure the worklight onto the telescopic stand (5) (Fig 8).

(Fig 4)

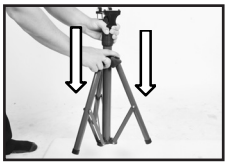

(Fig 5)

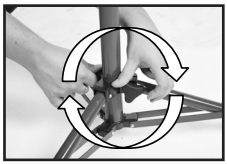

(Fig 6)

(Fig 7)

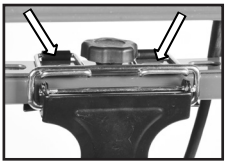

(Fig 8)

Assembly of KP2304 & KP2305 - 2 in1 Twin Worklights

1. Place the H frame stand (4) on a stable work area with the rubber feet facing down (Fig.9).
2. Place the soft grip handle (1) frame onto the H frame stand (4).
3. Insert the two hex key bolts (14) through the handle mounting plate holes and screw into the H frame stand (4) fastening holes (Fig.10). Tighten the fasteners with a 5mm hex key (not supplied).
4. While holding a LED worklight in one hand, lower and place the light support frame (3) onto the one side of the H frame stand (4) ensuring that the two centre holes are aligned (Fig 11).
5. Insert the light lock knob (9) through the light support frame (3) hole and screw into the H frame stand (4) fastening hole by rotating clockwise (Fig 12).
6. Repeat step 4 and 5 for assembly of the second worklight on the opposite side.
7. Insert the Power Cord Lock Knob (13) through the hole in the power cord Y junction, then into the light support frame (3) hole and screw into the H frame stand (4) fastening hole (Fig 13).
8. Locate the telescopic stand (5) and release the telescopic stand lock knob (6) by rotating anti-clockwise (Fig 14).
9. Lower the telescopic stand legs (7) (Fig 15) until the legs are fully spread apart as shown in Fig 16 and re-tighten telescopic stand lock knob (6).
10. Release the quick release clamp (8) and fold the wire holders away from the quick release lever (Fig 17).
11. Place the assembled LED worklight onto the telescopic quick release clamp (8) (Fig 17), fold the 2 small wire clips over the H frame stand (4) (Fig 18), then locate the large wire clip over the top of the 2 small wire clip and push down on the quick release lever to secure the worklight onto the telescopic stand (5) (Fig 19)

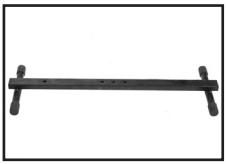
(Fig 9)

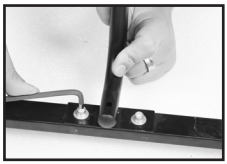
(Fig 10)

(Fig 11)

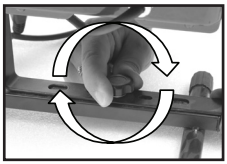
(Fig 12)

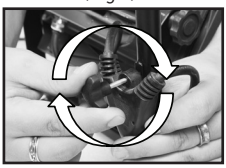
(Fig 13)

(Fig 14)

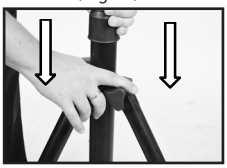
(Fig 15)

(Fig 16)

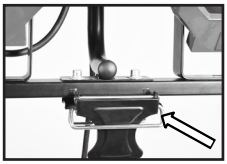
(Fig 17)

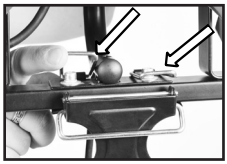
(Fig 18)

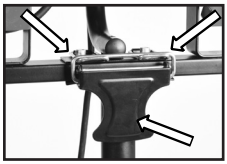
(Fig 19)

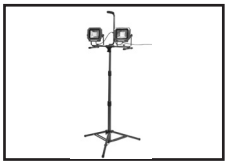
(Fig 20)

12. The twin worklight is fully assembled (Fig 20).

OPERATION

Note: Always ensure that the LED worklight is directed away from you or other bystanders before switching the LED worklight ON. The LED light output could cause damage to the eyes if directed at a bystander's eyes.

Adjusting the LED Light Output Direction Up/Down

1. The LED work light heads can be tilted 30° downwards or 90° upwards.
2. To tilt the LED worklight up or down, loosen the tilt lock knobs (2) (Fig 21) in an anti-clockwise direction and tilt the worklight into the desired direction (Fig 22) and then re-tighten the tilt lock knobs (2) by rotating clockwise (Fig 23).

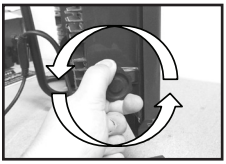
(Fig 21)

(Fig 22)

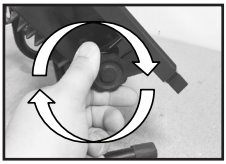
(Fig 23)

Adjusting the LED Light Output Direction Left/Right

1. The LED work light heads can be rotated 180° to the Left or Right (Fig 24).

Caution: Becareful not to stretch or twist the worklights power cable.

2. To rotate the LED worklights Left or Right, loosen the light lock knob (5) by rotating anti-clockwise (Fig 25) and rotate the worklight into the desired direction (Fig 24).
3. Secure the worklight into your desired direction by rotating the light lock knob (5) clockwise until tight (Fig 26).

(Fig 24)

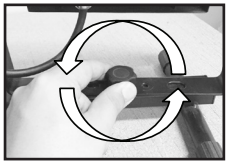
(Fig 25)

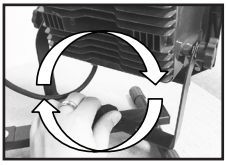
(Fig 26)

Adjusting the Height of the Telescopic Stand Up/Down (Models KP2303, KP2304 & KP2305)

1. The LED work light can be raised or lowered to the desired height.
   The Telescopic Stand (5) has a dual stage height adjustments.
2. To adjust the height of the upper section of the telescopic stand (5), loosen the upper telescopic lock nut (5a), by rotating anti-clockwise (Fig 27) and raise the telescopic stand to the desired direction (Fig 28), then secure the by rotating the telescopic lock nuts (5a) clockwise until tight (Fig 29).
3. To adjust the height of the lower section of the telescopic stand (5), loosen the lower telescopic lock nut (5a), by rotating anti-clockwise and raise the telescopic stand to the desired direction (Fig 28), then secure the by rotating the telescopic lock nuts (5a) clockwise until tight (Fig 29).

(Fig 27)

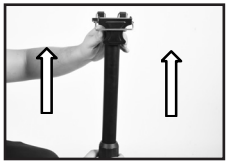
(Fig 28)

(Fig 29)

Turning ON/OFF the LED Worklights

1. To turn ON the LED Worklight, plug in the power cord to your mains power socket and turn the mains outlet switch ON.
2. To turn OFF the LED Worklight, turn the mains outlet switch OFF.

SPARE PARTS

For a full list of available spare parts for this item visit the Kincrome website www.kincrome.com.au or alternatively contact Kincrome Customer Service on 1300 657 528.

SERVICE

Have your product serviced by a qualified repair person using only identical replacement parts. This will ensure that the safety, reliability and performance of the LED worklights is maintained.

CARING FOR THE ENVIRONMENT

When a tool is no longer usable it should not be disposed of with household waste, but in an environmentally friendly way. Please recycle where facilities exist. Check with your local council authority for recycling advice. Recycling packaging reduces the need for landfill and raw materials. Reuse of recycled material decreases pollution in the environment. Please recycle packaging where facilities exist. Check with your local council authority for recycling advice.

CLEANING AND MAINTENANCE

WARNING! Always ensure that the LED Worklight is not connected to the mains supply before you start any maintenance work.

WARNING! Never use solvents or other harsh chemicals for cleaning any parts of the tool. These chemicals may weaken the plastic materials used in these parts, or can discolor the finish of the product. Use a cloth dampened only with water and mild soap. Never let any liquid get inside the tool; never immerse any part of the tool into a liquid.

WARNING! Do not use the LED Worklight if a supply cord or important parts of the machine are damaged, e.g. charger.

KINCROME CONTACT DETAILS

Phone: 1300 657 528

Fax: 1300 556 005

Email: enquiries@kincrome.com.au

Website: www.kincrome.com.au

12 MONTH WARRANTY

Warranty given by Kincrome Australia Pty Ltd of 3 Lakeview Drive, Caribbean Park, Scoresby, Victoria (Tel +61 3 9730 7100). The applicable warranty period (12 months) commences on the date that the product is purchased. If this product has materials or workmanship defects (other than defects caused by abnormal or non-warranted use) you can, at your cost, send the product to place of purchase, an authorised Kincrome service agent or one of Kincromes addresses for repair or replacement. Your rights under this warranty are in addition to any other rights you have under the Australian United Kingdom & Ireland Consumer Law or other applicable laws. Our goods come with guarantees that cannot be excluded under the Australian United Kingdom & Ireland Consumer Law. You are entitled to a replacement or refund for a major failure and compensation for any other reasonably foreseeable loss or damage. You are also entitled to have the goods repaired or replaced if the goods fail to be of acceptable quality and the failure does not amount to a major failure. For further details please visit www.kincrome.com.au or call us. Due to minor changes in design or manufacture, the product you purchase may sometimes differ from the one shown on the packaging.

KINCROME®
PROFESSIONAL QUALITY TOOLS

www.kincrome.com.au